Illumitex NeoSol NS

Commercial grade
LED plant growth fixture for hobby and home use

PRODUCT FEATURES

FEATURES
- Ultra-precision beam control
- Adjustable beam angle
- 54 Illumitex Surexi F3 LEDs
- Lightweight and completely silent
- No cooling fans
- Thin profile
- No assembly required
- IP66-rated waterproof LEDs

BENEFITS
- Promotes germination & flowering
- Maximum photosynthetic light on plants
- LED performance greater than 600W HPS
- Edge-to-edge color uniformity
- 60,000 hour LED lifetime

APPLICATIONS
- Growth chambers and tents
- Grow rooms
- Hobbies

PLANT GROWTH LIGHTING

The NeoSol NS is the only commercial-grade LED plant growth fixture designed for home and hobby projects. Available with Illumitex Surexi F3 Spectrum LEDs (static spectrum), the slim fixture design maximizes volumetric area for plant growth and minimizes fixture weight and energy consumption. Illumitex LED technology produces high Photosynthetically Active Radiation (PAR) values with superior light utilization and beam uniformity.

NeoSol NS

TECHNICAL SPECIFICATIONS

Input Voltage: 120
Drive Current: 530mA
Wattage: 300W
Finish: Clear anodized finish on bars; blue powder-coat on housing

Environmental Rating: IP66 per IEC529
Fixture Weight: 23.5 lbs.
Dimensions: 18 x 37 x 3 in.
Certifications:

DIMENSIONAL DRAWINGS

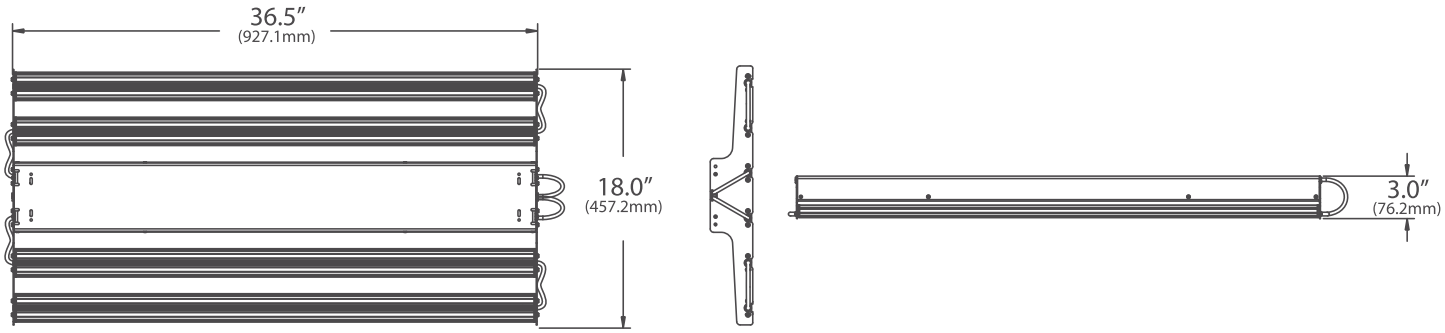

SPECTRUM & PHOTOMETRICS

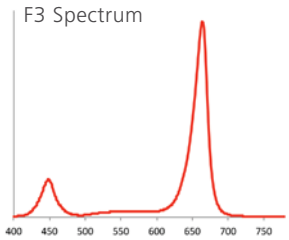

Spectrum	F3
Beam Angle	50°
Digital Distribution	DD65
Radiometric Watts (W)	80
PPF Typical (µmol/s)	390
PPF/Wel Typical (µmol/J)*	1.2
Electrical Watts	314

Assumptions on power: Use 55C ETO data; assume 530mA drive current
* Including external power supply with 88% efficiency

ORDERING GUIDE

N	S	6	3	6	9	F	3	6	3	0	U

SERIES
☑ NS

NO. OF BARS
☑ 6 = 6 Bar

BAR LENGTH
☑ 36" Bar

NO. OF LEDs PER BAR
☑ 9 Surexi LEDs

LED SPECTRA
☑ F3 = F3 50°

DIGITAL DISTRIBUTION
☑ 6 = DD65

POWER SUPPLY
☑ 30 = 300W 6 Bar

INPUT
☑ U = 120V

1 512 279 5020 | www.illumitex.com

illumitex